CRISTINA

Spare Parts List

CRIIT12072CC | Italy Series | Polished Black Chrome | Polished Calacatta

How to request a replacement

Provide B&M with the complete SKU CRIIT12072CC, purchase details and photographs of the installed product and required component. Match the exact model and production revision before ordering.

Manufacturer reference	Selection
CRICF14610Q00	Manufacturer reference
CRIFU17163P	Finish or material dependent
CRIPR17154Q	Finish or material dependent
CRIRG19818P00	Manufacturer reference
CRIST6631P00	Manufacturer reference
CRIVT6687Q00	Manufacturer reference
CRIVT6875Q00	Manufacturer reference

Finish and revision notes

Finish/material-dependent families require the correct suffix. Select 72 Polished Black Chrome and the correct control material only where the original sheet lists that option. Do not order another finish column or historical revision. Confirm the complete replacement reference before ordering.

*CRIFU17163P...

Original manufacturer exploded view follows; its callouts, historical notes and finish qualifications are retained.

ITALY

SCHEDA RICAMBI | SPARE PARTS

SCHEDA RICAMBI | SPARE PARTS SHEET rev.01_02/2025

CRIIT120

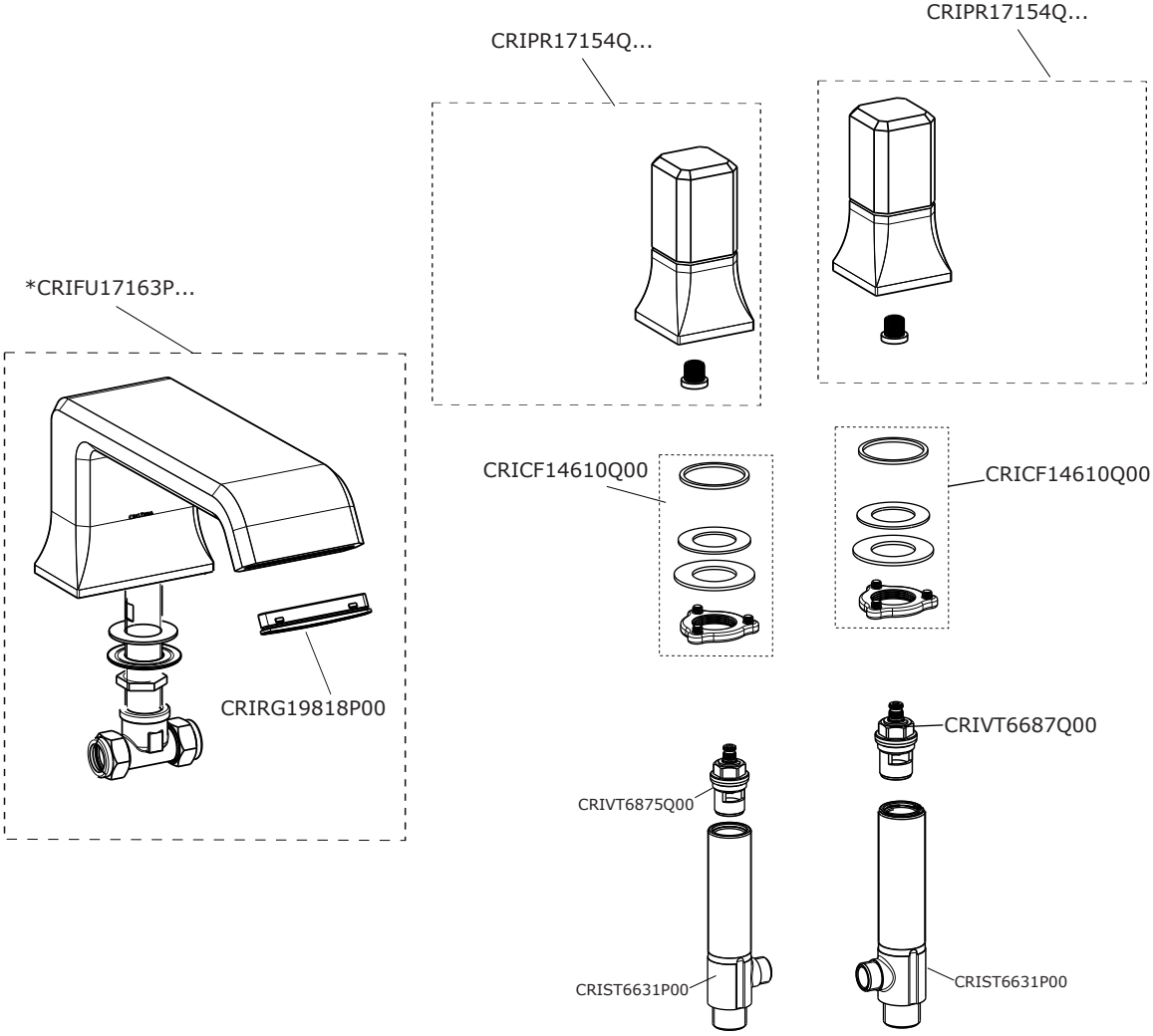

NOTE | NOTES

* completare con codice finitura | complete with finishing code

CRISTINA S.r.l. a socio unico
via G. Fava, 56 - 28024 Gozzano (NO) Italy - phone +39 0322 9545
fax +39 0322 956556 - info@cristinagroup.com
cristinarubinetterie.com

CRISTINA
RUBINETTERIE